TechFast
Technical Fastening Solutions

FH867 - Schwenkhebelverschluss

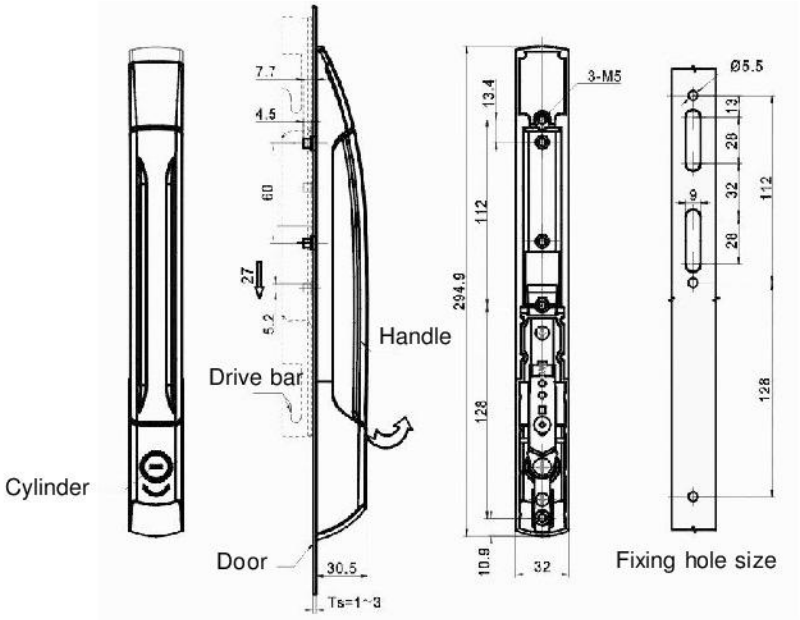

Handle part number	Description
FH867	With Key-lock

Ref	Part description	Material - Finishing
1	Body and Handle	Zinc alloy - Grey powder coated
2	Drive bars	Steel - White zinc Cr6 free